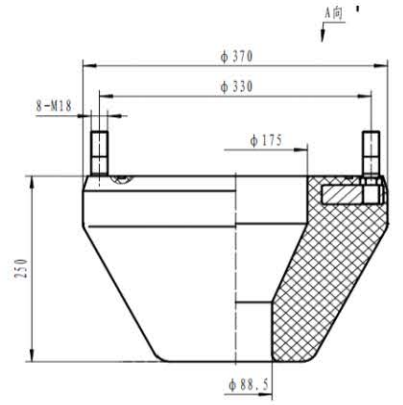



Equipment information	Williams TYPE 7100
Part number	XWSY696
Description	Williams TYPE 7100 RCD Element For drill pipe 4 1/2" Standard Service
API Temperature Class	EA
Performance level	API 16 RCD
Equipment rated working pressure	5000 psi
Temperature range	Low temperature -1℃(30℉) Extreme high temperature 82℃(180℉)
Elastomer type	NR
Stripping test	2010 tool joints at 1000psi
Static pressure test	5000 psi
Weight	36KG
Bolts	8 bolts M18 or M20 type