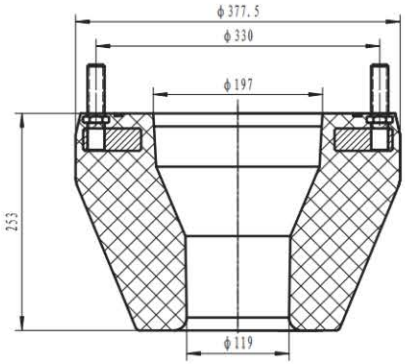



Equipment information	Williams TYPE 7100
Part number	XWSY2652
Description	Williams TYPE 7100 RCD Element For drill pipe 5 1/2" Standard Service
API Temperature Class	EA
Performance level	API 16 RCD
Equipment rated working pressure	5000 psi
Temperature range	Low temperature -1℃(30℉) Extreme high temperature 82℃(180℉)
Elastomer type	NR
Stripping test	2006 tool joints at 1000psi
Static pressure test	5000 psi
Weight	36KG
Bolts	8 bolts M18 type