MPD RCD ELEMENT

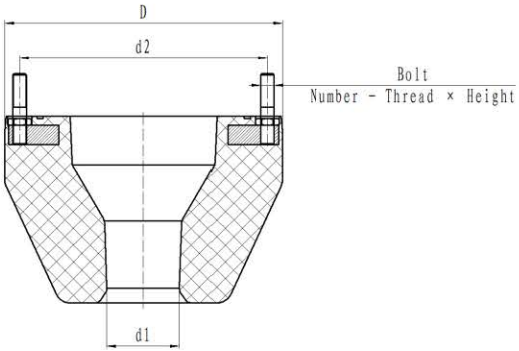

Item	Drawing No	Pipe Size	d1	D1	d2	Bolt			Note
						Number	Thread	Height	
1	XWSY1056	2 7/8"	ϕ52	ϕ370	ϕ330	8	M18	57	
2	XWSY4183	3 1/2"	ϕ73	ϕ370	ϕ330	8	M18	57	
3	XWSY4244	3 1/2"	ϕ73	ϕ377.5	ϕ330	12	M18	51	
4	XWSY3684	4"	ϕ78	ϕ370	ϕ330	8	M18	57	
5	XWSY4243	4"	ϕ78	ϕ377.5	ϕ330	12	M18	51	
6	XWSY2437	4 1/2"	ϕ84	ϕ370	ϕ330	8	M18	57	
7	XWSY4013	5"	ϕ97	ϕ370	ϕ330	8	M18	57	
8	XWSY4186	5"	ϕ97	ϕ377.5	ϕ328	12	M18	51	
9	XWSY3860	5 1/2"	ϕ114	ϕ377.5	ϕ330	8	M18	57	
10	XWSY3671	5 1/2"	ϕ119	ϕ377.5	ϕ328	12	M18	51	
11	XWSY2652	5 7/8"	ϕ119	ϕ377.5	ϕ330	8	M18	57	
12	XWSY3884	5 7/8"	ϕ119	ϕ377.5	ϕ328	12	M18	57	
13	XWSY3885	6 5/8"	ϕ140	ϕ381	ϕ328	12	M18	57	