RCD ELEMENT

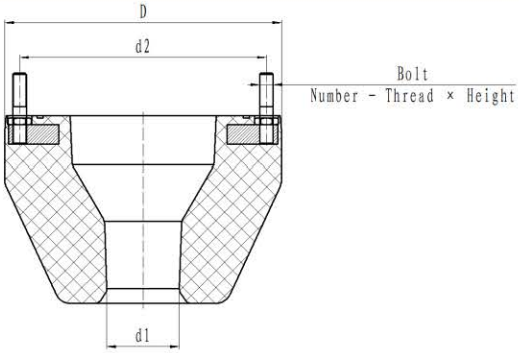

Item	Drawing No	Pipe Size	d1	D1	d2	Bolt			Note
						Number	Thread	Height	
1	XWSY3300	C.S.O	/	ϕ370	ϕ330	8	M18	53	
2	XWSY1056	2 7/8"	ϕ52	ϕ370	ϕ330	8	M18	57	
3	XWSY3211	3 1/2"	ϕ60	ϕ370	ϕ330	8	M18	57	For square drill pipe
4	XWSY4183	3 1/2"	ϕ73	ϕ370	ϕ330	8	M18	57	For Hexagonal drill pipe
5	XWSY1578	3 1/2"	ϕ75	ϕ377.5	ϕ330	8	M18	57	
6	XWSY4244	3 1/2"	ϕ73	ϕ377.5	ϕ330	12	M18	51	
7	XWSY3684	4"	ϕ78	ϕ370	ϕ330	8	M18	57	
8	XWSY4243	4"	ϕ78	ϕ377.5	ϕ330	12	M18	51	
9	XWSY2437	4 1/2"	ϕ84	ϕ370	ϕ330	8	M18	57	
10	XWSY3707	5"	ϕ97	ϕ370	ϕ330	8	M18	57	
11	XWSY4004	5"	ϕ97	ϕ370	ϕ330	8	M18	57	
12	XWSY4236	5"	ϕ97	ϕ370	ϕ330	8	M18	57	
13	XWSY4234	5"	ϕ97	ϕ370	ϕ330	8	M18	67	
14	XWSY4245	5"	ϕ97	ϕ370	ϕ320.7	8	M16	57	
15	XWSY4186	5"	ϕ97	ϕ377.5	ϕ328	12	M18	57	
16	XWSY4186	5"	ϕ97	ϕ377.5	ϕ328	12	M18	51	
17	XWSY489	5"	ϕ102	ϕ377.5	ϕ330	8	M18	57	
18	XWSY3112	5"	ϕ103.5	ϕ397.5	ϕ347.6	10	M18	52.5	
19	XWSY3860	5 1/2"	ϕ114	ϕ377.5	ϕ330	8	M18	57	
20	XWSY3860	5 1/2"	ϕ114	ϕ377.5	ϕ330	8	M18	57	For Hexagonal drill pipe
21	XWSY3861	5 1/2"	ϕ114	ϕ377.5	ϕ330	8	M18	57	
22	XWSY3671	5 1/2"	ϕ119	ϕ377.5	ϕ328	12	M18	51	
23	XWSY3113	5 1/2"	ϕ108.5	ϕ397.5	ϕ347.6	10	M18	52.5	
24	XWSY2652	5 7/8"	ϕ119	ϕ377.5	ϕ330	8	M18	57	
25	XWSY3884	5 7/8"	ϕ119	ϕ377.5	ϕ328	12	M18	57	
26	XWSY3885	6 5/8"	ϕ140	ϕ381	ϕ328	12	M18	57	
27	XWSY3279	6 5/8"	ϕ140	ϕ397.5	ϕ347.6	10	M18	52.5	