四川新为橡塑有限公司
Sichuan Xinwei Rubber Co., Ltd

产 品 册
PRODUCT CATALOG

Contact information
联系我们

电话/Tell：+86 816 3528011 or 3253333
传真/Fax：+86 816 3253333
邮箱/E-mail：zyg@xinweisino.com
公司网站：www.xinweisino.com
地　　址：四川省江油市高新技术产业园区攀羊路14号
Address：Panyang Road No.14, High-tech Zone, Jiangyou City, Sichuan Province, China.

让新为走向世界，让世界信赖新为
To make the world know and trust Xinwei



Technical Data Sheet

Spherical Packing Elements



Equipment information	7 1/16" 3K
Part number	XWSY1206（PN: 150847）
Description	Spherical Packing Element 7 1/16" 3K Standard Service API Temperature Class: BGD
Performance level	API 16A PR2
Equipment rated working pressure	3000 psi
Temperature range	Low temperature -18℃(0℉) Continuous operating temperature: other Extreme high temperature 121℃(250℉)
Elastomer type	NBR
Weight	55KG
Size	ID190mm×OD478mm×H212mm
Seal kit	Available

Spherical Packing Elements	Equipment information	7 1/16" 5K
	Part number	XWSY1206（PN: 150847）
	Description	Spherical Packing Element 7 1/16" 5K Standard Service API Temperature Class: BGD
	Performance level	API 16A PR2
	Equipment rated working pressure	5000 psi
	Temperature range	Low temperature -18℃(0℉) Continuous operating temperature: other Extreme high temperature 121℃(250℉)
	Elastomer type	NBR
	Weight	55KG
	Size	ID190mm×OD478mm×H212mm
	Seal kit	Available

Spherical Packing Elements	Equipment information	7 1/16" 10K
	Part number	XWSY3699（PN: 150987）
	Description	Spherical Packing Element 7 1/16"10K Standard Service API Temperature Class: BGD
	Performance level	API 16A PR2
	Equipment rated working pressure	10000 psi
	Temperature range	Low temperature -18℃(0℉) Continuous operating temperature: other Extreme high temperature 121℃(250℉)
	Elastomer type	NBR
	Weight	125KG
	Size	ID237mm×OD578mm×H275mm
	Seal kit	Available

Spherical Packing Elements	Equipment information	9" 3K
	Part number	XWSY2176（PN: 150996）
	Description	Spherical Packing Element 9" 3K Standard Service API Temperature Class: BGD
	Performance level	API 16A PR2
	Equipment rated working pressure	3000 psi
	Temperature range	Low temperature -18℃(0℉) Continuous operating temperature: other Extreme high temperature 121℃(250℉)
	Elastomer type	NBR
	Weight	116KG
	Size	ID242mm×OD616mm×H290mm
	Seal kit	Available

Spherical Packing Elements	Equipment information	9" 5K
	Part number	XWSY2176（PN: 150996）
	Description	Spherical Packing Element 9" 5K Standard Service API Temperature Class: BGD
	Performance level	API 16A PR2
	Equipment rated working pressure	5000 psi
	Temperature range	Low temperature -18℃(0℉) Continuous operating temperature: other Extreme high temperature 121℃(250℉)
	Elastomer type	NBR
	Weight	116KG
	Size	ID242mm×OD616mm×H290mm
	Seal kit	Available

Spherical Packing Elements	Equipment information	11" 3K
	Part number	XWSY2177（PN: 150578）
	Description	Spherical Packing Element 11" 3K Standard Service API Temperature Class: BGD
	Performance level	API 16A PR2
	Equipment rated working pressure	3000 psi
	Temperature range	Low temperature -18℃(0℉) Continuous operating temperature: other Extreme high temperature 121℃(250℉)
	Elastomer type	NBR
	Weight	142KG
	Size	ID300mm×OD702mm×H283mm
	Seal kit	Available

SPHERICAL PACKING ELEMENTS	Equipment information	11" 5K
	Part number	XWSY10001/10001A（PN: 150810）
	Description	Spherical Packing Element 11" 5K Standard Service API Temperature Class: BGD
	Performance level	API 16A PR2
	Equipment rated working pressure	5000 psi
	Temperature range	Low temperature -18℃(0℉) Continuous operating temperature: other Extreme high temperature 121℃(250℉)
	Elastomer type	NBR
	Weight	197KG
	Size	ID290mm×OD703mm×H319mm
	Seal kit	Available

Spherical Packing Elements	Equipment information	11" 10K
	Part number	XWSY1211 (PN: 152373)
	Description	Spherical Packing Element 11" 10K Standard Service API Temperature Class: BGD
	Performance level	API 16A PR2
	Equipment rated working pressure	10000 psi
	Temperature range	Low temperature -18℃(0℉) Continuous operating temperature: other Extreme high temperature 121℃(250℉)
	Elastomer type	NBR
	Weight	221KG
	Size	ID313mm×OD755mm×H311mm
	Seal kit	Available

Spherical Packing Elements	Equipment information	13 5/8" 3K
	Part number	XWSY10005 (PN: 150576)
	Description	Spherical Packing Element 13 5/8" 3K Standard Service API Temperature Class: BGD
	Performance level	API 16A PR2
	Equipment rated working pressure	3000 psi
	Temperature range	Low temperature -18℃(0℉) Continuous operating temperature: other Extreme high temperature 121℃(250℉)
	Elastomer type	NBR
	Weight	233KG
	Size	ID365mm×OD810mm×H368mm
	Seal kit	Available

Spherical Packing Elements	Equipment information	13 5/8" 5K
	Part number	XWSY10005（PN: 150576）
	Description	Spherical Packing Element 13 5/8" 5K Standard Service API Temperature Class: BGD
	Performance level	API 16A PR2
	Equipment rated working pressure	5000 psi
	Temperature range	Low temperature -18℃(0℉) Continuous operating temperature: other Extreme high temperature 121℃(250℉)
	Elastomer type	NBR
	Weight	233KG
	Size	ID365mm×OD810mm×H368mm
	Seal kit	Available

Spherical Packing Elements	Equipment information	13 5/8" 10K
	Part number	XWSY1488（PN: 152693）
	Description	Spherical Packing Element 13 5/8" 10K Standard Service API Temperature Class: BGD
	Performance level	API 16A PR2
	Equipment rated working pressure	10000 psi
	Temperature range	Low temperature -18℃(0℉) Continuous operating temperature: other Extreme high temperature 121℃(250℉)
	Elastomer type	NBR
	Weight	286KG
	Size	ID365mm×OD836mm×H375mm
	Seal kit	Available

Spherical Packing Elements	Equipment information	16 3/4" 5K
	Part number	XWSY3825（PN: 150851）
	Description	Spherical Packing Element 16 3/4" 5K Standard Service API Temperature Class: BGD
	Performance level	API 16A PR2
	Equipment rated working pressure	5000 psi
	Temperature range	Low temperature -18℃(0℉) Continuous operating temperature: other Extreme high temperature 121℃(250℉)
	Elastomer type	NBR
	Weight	370KG
	Size	ID444mm×OD910mm×H412mm
	Seal kit	Available

Spherical Packing Elements	Equipment information	18 3/4" 5K
	Part number	XWHY0051（PN: 151361）
	Description	Spherical Packing Element 18 3/4" 5K Standard Service API Temperature Class: BGC
	Performance level	API 16A PR2
	Equipment rated working pressure	5000psi
	Temperature range	Low temperature -18℃(0℉) Continuous operating temperature: other Extreme high temperature 104℃(220℉)
	Elastomer type	NBR
	Weight	527KG
	Size	ID502mm×OD1030mm×H460mm
	Seal kit	Available

Spherical Packing Elements	Equipment information	18 3/4" 10K
	Part number	XWSY3085（PN: 155295）
	Description	Spherical Packing Element 18 3/4" 10K Standard Service API Temperature Class: BGC
	Performance level	API 16A PR2
	Equipment rated working pressure	10000 psi
	Temperature range	Low temperature -18℃(0℉) Continuous operating temperature: other Extreme high temperature 104℃(220℉)
	Elastomer type	NBR
	Weight	674KG
	Size	ID525mm×OD1104mm×H502mm
	Seal kit	Available

Spherical Packing Elements	Equipment information	20 3/4" 3K
	Part number	XWSY2598（PN: 150799）
	Description	Spherical Packing Element 20 3/4" 3K Standard Service API Temperature Class: BGC
	Performance level	API 16A PR2
	Equipment rated working pressure	3000 psi
	Temperature range	Low temperature -18℃(0℉) Continuous operating temperature: other Extreme high temperature 104℃(220℉)
	Elastomer type	NBR
	Weight	375KG
	Size	ID545mm×OD982mm×H400mm
	Seal kit	Available

Spherical Packing Elements	Equipment information	21 1/4" 2K
	Part number	XWSY2598（PN: 150799）
	Description	Spherical Packing Element 21 1/4" 2K Standard Service API Temperature Class: BGC
	Performance level	API 16A PR2
	Equipment rated working pressure	2000 psi
	Temperature range	Low temperature -18℃(0℉) Continuous operating temperature: other Extreme high temperature 104℃(220℉)
	Elastomer type	NBR
	Weight	375KG
	Size	ID545mm×OD982mm×H400mm
	Seal kit	Available

Spherical Packing Elements	Equipment information	21 1/4" 5K
	Part number	XWSY3369（PN: 150853）
	Description	Spherical Packing Element 21 1/4" 5K Standard Service API Temperature Class: BGC
	Performance level	API 16A PR2
	Equipment rated working pressure	5000 psi
	Temperature range	Low temperature -18℃(0℉) Continuous operating temperature: other Extreme high temperature 104℃(220℉)
	Elastomer type	NBR
	Weight	655KG
	Size	ID560mm×OD1104mm×H502mm
	Seal kit	Available

Technical Data Sheet

Type GK Annular Packing Elements

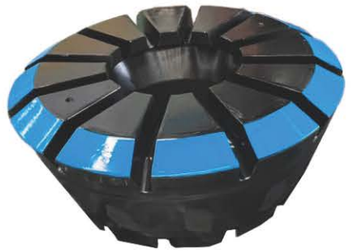

Equipment information	Type GK 7 1/16'' 3K
Part number	XWSY3696(31078/1003252-02)
Description	Annular BOP Packing Element Type GK, 7 1/16'' 3K Standard Service API Temperature Class: BGD
Performance level	API 16A PR2
Equipment rated working pressure	3000 psi
Temperature range	Low temperature -18℃(0℉) Continuous operating temperature: other Extreme high temperature 121℃(250℉)
Elastomer type	NBR
Weight	50KG
Size	ID182mm×OD448.4mm×H196.8mm
Seal kit	Available



Equipment information	Type GK 7 1/16'' 5K
Part number	XWSY3697(30667/1003253-02)
Description	Annular BOP Packing Element Type GK, 7 1/16'' 5K Standard Service API Temperature Class: BGD
Performance level	API 16A PR2
Equipment rated working pressure	5000 psi
Temperature range	Low temperature -18℃(0℉) Continuous operating temperature: other Extreme high temperature 121℃(250℉)
Elastomer type	NBR
Weight	56KG
Size	ID193mm×OD464.1mm×H228mm
Seal kit	Available



Equipment information	Type GK 7 1/16'' 10K
Part number	XWSY3753(39151/1003254-02)
Description	Annular BOP Packing Element Type GK, 7 1/16'' 10K Standard Service API Temperature Class: BGD
Performance level	API 16A PR2
Equipment rated working pressure	10000 psi
Temperature range	Low temperature -18℃(0℉) Continuous operating temperature: other Extreme high temperature 121℃(250℉)
Elastomer type	NBR
Weight	224KG
Size	ID194.5mm×OD617.5mm×HD431.8mm
Seal kit	Available



Equipment information	Type GK 9'' 5K
Part number	XWSY2094(33506/1003277-02)
Description	Annular BOP Packing Element Type GK, 9'' 5K Standard Service API Temperature Class: BGD
Performance level	API 16A PR2
Equipment rated working pressure	5000 psi
Temperature range	Low temperature -18℃(0℉) Continuous operating temperature: other Extreme high temperature 121℃(250℉)
Elastomer type	NBR
Weight	115KG
Size	ID240mm×OD582mm×H293mm
Seal kit	Available



Equipment info.	Type GK 11'' 5K
Part number	XWSY3701 (1003260-02)
Description	Annular BOP packing element Model GK, 11'' 5K Standard service API Temperature Class BGD
Performance level	API 16A PR2
Equipment rated working pressure	5000 psi(35MPa)
Temperature range	Low temperature: -18℃(0℉) Continuous operating temperature: other Extreme high temperature:121℃(250℉)
Elastomer type	NBR
Weight	136KG
Size	ID289*OD629*H304 mm
Seal kit	Available



Equipment information	Type GK 13 5/8'' 3K
Part number	XWSY3878(30732/1003262-02)
Description	Annular BOP Packing Element Type GK, 13 5/8'' 3K Standard Service API Temperature Class: BGD
Performance level	API 16A PR2
Equipment rated working pressure	3000 psi
Temperature range	Low temperature -18℃(0℉) Continuous operating temperature: other Extreme high temperature 121℃(250℉)
Elastomer type	NBR
Weight	190KG
Size	ID356.08mm×OD630mm×H270mm
Seal kit	Available



Equipment information	Type GK 13 5/8'' 5K
Part number	XWSY1227(38148/1003263-02)
Description	Annular BOP Packing Element Type GK, 13 5/8'' 5K Standard Service API Temperature Class: BGD
Performance level	API 16A PR2
Equipment rated working pressure	5000 psi
Temperature range	Low temperature -18℃(0℉) Continuous operating temperature: other Extreme high temperature 121℃(250℉)
Elastomer type	NBR
Weight	204KG
Size	ID356mm×OD748mm×H342mm
Seal kit	Available



Equipment information	Type GK 13 5/8'' 10K
Part number	XWSY3873(44827/1003265-02)
Description	Annular BOP Packing Element Type GK, 13 5/8'' 10K Standard Service API Temperature Class: BGD
Performance level	API 16A PR2
Equipment rated working pressure	10000 psi
Temperature range	Low temperature -18℃(0℉) Continuous operating temperature: other Extreme high temperature 121℃(250℉)
Elastomer type	NBR
Weight	397KG
Size	ID373mm×OD797mm×H408mm
Seal kit	Available



Equipment information	Type GK 16 3/4'' 5K
Part number	XWSY2084(45434/1003268-02)
Description	Annular BOP Packing Element Type GK, 16 3/4'' 5K Standard Service API Temperature Class: BGD
Performance level	API 16A PR2
Equipment rated working pressure	5000 psi
Temperature range	Low temperature -18℃(0℉) Continuous operating temperature: other Extreme high temperature 121℃(250℉)
Elastomer type	NBR
Weight	313KG
Size	ID445mm×OD887mm×H380mm
Seal kit	Available

Technical Data Sheet

Type GX Annular Packing Element



Equipment information	Type GX 11'' 10K
Part number	XWSY1906(1010026-02)
Description	Annular BOP Packing Element Type GX, 11'' 10K Standard Service API Temperature Class: BGD
Performance level	API 16A PR2
Equipment rated working pressure	10000 psi
Temperature range	Low temperature -18℃(0℉) Continuous operating temperature: other Extreme high temperature 121℃(250℉)
Elastomer type	NBR
Weight	232KG
Size	ID302mm×OD778mm×H380mm
Seal kit	Available



Equipment information	Type GX 11'' 15K
Part number	XWSY3284(3113489-02)
Description	Annular BOP Packing Element Type GX, 11'' 15K Standard Service API Temperature Class: BGD
Performance level	API 16A PR2
Equipment rated working pressure	15000 psi
Temperature range	Low temperature -18℃(0℉) Continuous operating temperature: other Extreme high temperature 121℃(250℉)
Elastomer type	NBR
Weight	380KG
Size	ID305.5mm×OD797mm×H506mm
Seal kit	Available

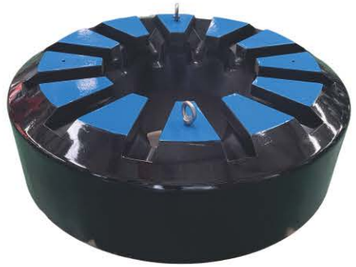

Equipment information	Type GX 13 5/8'' 5K
Part number	XWHY0065(3112017-2)
Description	Annular BOP Packing Element Type GX, 13 5/8'' 5K Standard Service API Temperature Class: BGD
Performance level	API 16A PR2
Equipment rated working pressure	5000 psi
Temperature range	Low temperature -18℃(0℉) Continuous operating temperature: other Extreme high temperature 121℃(250℉)
Elastomer type	NBR
Weight	191KG
Size	ID375mm×OD798mm×H343.5mm
Seal kit	Available



Equipment information	Type GX 13 5/8'' 10K
Part number	XWSY1600(1009175-02)
Description	Annular BOP Packing Element Type GX, 13 5/8'' 10K Standard Service API Temperature Class:BGD
Performance level	API 16A PR2
Equipment rated working pressure	10000 psi
Temperature range	Low temperature -18℃(0℉) Continuous operating temperature: other Extreme high temperature 121℃(250℉)
Elastomer type	NBR
Weight	267KG
Size	ID373mm×OD797mm×H408mm
Seal Kit	Available



Equipment information	Type GX 18 3/4'' 10K
Part number	XWHY0064(3127398/1008949)
Description	Annular BOP Packing Element Type GX, 18 3/4'' 10K Standard Service API Temperature Class: BGC
Performance level	API 16A PR2
Equipment rated working pressure	10000 psi
Temperature range	Low temperature -18℃(0℉) Continuous operating temperature: other Extreme high temperature 104℃(220℉)
Elastomer type	NBR
Weight	644KG
Size	ID520mm×OD1129mm×H855mm
Seal kit	Available

Technical Data Sheet

Type MSP Annular Packing Element



Equipment information	Type MSP 21 1/4'' 2K
Part number	XWSY3565(37375/1003273-02)
Description	Annular BOP Packing Element Type MSP, 21 1/4'' 2K Standard Service API Temperature Class: BGC
Performance level	API 16A PR2
Equipment rated working pressure	2000 psi
Temperature range	Low temperature -18℃(0℉) Continuous operating temperature: other Extreme high temperature 104℃(220℉)
Elastomer type	NBR
Weight	355KG
Size	ID566mm×OD1058mm×H302mm
Seal kit	Available



Equipment information	Type MSP 29 1/2'' 500 psi
Part number	XWSY1950(1003275-02)
Description	Annular BOP Packing Element Type MSP, 29 1/2'' 500 psi Standard Service API Temperature Class: BGC
Performance level	API 16A PR2
Equipment rated working pressure	500 psi
Temperature range	Low temperature -18℃(0℉) Continuous operating temperature: other Extreme high temperature 104℃(220℉)
Elastomer type	NBR
Weight	950KG
Size	ID788.9mm×OD1583.4mm×H380mm
Seal kit	Available

Technical Data Sheet

Type DL Annular Packer



Equipment information	13 5/8" 10K
Part number	XWHY0275/0276 (644856-07-00-01)
Description	Annular BOP Packer Model DL, 13 5/8" 10K Standard Service API Temperature Class: EGD
Performance level	API 16A PR2
Equipment rated working pressure	10000 psi
Temperature range	Low temperature -1℃(30℉) Continuous operating temperature: other Extreme high temperature 121℃(250℉)
Elastomer type	NBR / HNBR
Weight	340 kg
Size	OD624mm×ID352mm×H327mm / OD1026mm×ID616mm×H300mm
Seal kit	Available



Equipment information	18 3/4" 5K
Part number	XWSY3839/3840 (2231480-09-00-01)
Description	Annular BOP Packer Model DL, 18 3/4" 5K Standard Service API Temperature Class: EGD
Performance level	API 16A PR2
Equipment rated working pressure	5000 psi
Temperature range	Low temperature -1℃(30℉) Continuous operating temperature: other Extreme high temperature 121℃(250℉)
Elastomer type	NBR/HNBR
Weight	420.9 kg
Size	OD872.2mm×ID508mm×H323.2mm / OD1135×ID805×H304.8mm
Seal kit	Available



Equipment information	18 3/4" 10K
Part number	XWHY0044/0045 (2232688-01-00-01/2232686-02-10-01)
Description	Annular BOP Packer Model DL, 18 3/4" 10K Standard Service API Temperature Class: EGD
Performance level	API 16A PR2
Equipment rated working pressure	10000 psi
Temperature range	Low temperature -1℃(30℉) Continuous operating temperature: other Extreme high temperature 121℃(250℉)
Elastomer type	NBR / HNBR
Weight	601 KG
Size	OD860mm×ID494mm×H458mm / OD1130mm×ID806mm×H409mm
Seal kit	Available



Equipment information	21 1/4" 2K
Part number	XWHY0069/0070 (644800-47-00-02/699339-47-10-02)
Description	Annular BOP Packer Model DL, 21 1/4" 2K Standard Service API Temperature Class: EGC
Performance level	API 16A PR2
Equipment rated working pressure	2000 psi
Temperature range	Low temperature -1℃(30℉) Continuous operating temperature: other Extreme high temperature 104℃(220℉)
Elastomer type	NBR / HNBR
Weight	534 KG
Size	OD984mm×ID558mm×H254mm / OD1272mm×ID908mm×H240mm
Seal kit	Available

Technical Data Sheet

Type U VBR Packer



Equipment information	Type U 13 5/8"-3K/5K/10K
Part number	Front seal: XWSY2309(645089-02-00-01) Top seal XWSY3491(644223-02-00-01)
VBR pipe size range	2 7/8''-5''
Description	Type U VBR Ram packer 13 5/8"-3K/5K/10K Standard service API Temperature Class: BCE
Performance level	API 16A PR2
Equipment rated working pressure	3000 psi/5000 psi/10000 psi
Temperature range	Low temperature: -18℃(0°F) Continuous operating temperature 99℃(210°F) Extreme high temperature 149℃(300°F)
Elastomer type	NBR
Weight	29KG



Equipment information	Type U 13 5/8"-3K/5K/10K
Part number	Front seal: XWSY2345(644924-03) Top seal XWSY3491(644223-02-00-01)
VBR pipe size range	4 1/2''-7''
Description	Type U VBR Ram packer 13 5/8"-3K/5K/10K Standard service API Temperature Class: BCE
Performance level	API 16A PR2
Equipment rated working pressure	3000 psi/5000 psi/10000 psi
Temperature range	Low temperature: -18℃(0°F) Continuous operating temperature 99℃(210°F) Extreme high temperature 149℃(300°F)
Elastomer type	NBR
Weight	29KG



Equipment information	Type U 13 5/8"-15K
Part number	Front seal: XWSY2313(644921-01) Top seal XWSY2317(644226-02-00-01)
VBR pipe size range	2 7/8''-5''
Description	Type U VBR Ram packer 13 5/8"-3K/5K/10K Standard service API Temperature Class: BCE
Performance level	API 16A PR2
Equipment rated working pressure	15000 psi
Temperature range	Low temperature: -18℃(0°F) Continuous operating temperature 99℃(210°F) Extreme high temperature 149℃(300°F)
Elastomer type	NBR
Weight	30KG



Equipment information	Type U 13 5/8"-15K
Part number	Front seal: XWSY2314 Top seal XWSY2317
VBR pipe size range	3 1/2''-5 1/2''
Description	Type U VBR Ram packer 13 5/8"-3K/5K/10K Standard service API Temperature Class: BCE
Performance level	API 16A PR2
Equipment rated working pressure	15000 psi
Temperature range	Low temperature: -18℃(0°F) Continuous operating temperature 99℃(210°F) Extreme high temperature 149℃(300°F)
Elastomer type	NBR
Weight	30KG

Technical Data Sheet

Type TL Ram Packer





Equipment information	Model TL 18 3/4" 5K		
Part number	Blade Seal	XWSY3863	2396892-01
	Upper, left side packer	XWSY3864	2396885-01-01
	Upper, right side packer	XWSY3865	2396886-01-01
	Lower, left side packer	XWSY3866	2396887-01-01
	Lower, right side packer	XWSY3867	2396888-01-01
	Top seal	XWSY3868	2396891-01
Description	Ram Packer ISR Model TL, 18 3/4" 5K Standard Service API Temperature Class: BDF		
Performance requirement	API 16A PR2		
Equipment rated working pressure	5000 psi		
Temperature range	Low temperature -18℃(0°F) Continuous operating temperature 116℃(240°F) Extreme high temperature 177℃(350°F)		
Elastomer type	HNBR		
Weight	12 KG		
Seal kit	Available		



Equipment information	Model TL 18 3/4" 5K		
Part number	Side Packer, Right	XWSY3948	2010326-01
	Side Packer, Left	XWSY3947	2010326-02
	Blade Packer	XWAY3946	2010332-01
	Top Seal	XWSY3928	2164247-01
Description	Ram Packer DVS Model TL, 18 3/4" 5K Standard Service API Temperature Class: BDF		
Performance requirement	API 16A PR2		
Equipment rated working pressure	5000 psi		
Temperature range	Low temperature -18℃(0°F) Continuous operating temperature 116℃(240°F) Extreme high temperature 177℃(350°F)		
Elastomer type	HNBR		
Weight	14 KG		
Seal kit	Available		



Equipment information	Model TL 18 3/4" 5K		
Part number	Packer 3 1/2"-7 5/8"	XWSY3927	2163493-01
	Top Seal	XWSY3928	2164247-01
Description	VBR Ram Packer 3 1/2"-7 5/8" Model TL, 18 3/4" 5K Standard Service API Temperature Class: BCE		
Performance requirement	API 16A PR2		
Equipment rated working pressure	5000 psi		
Temperature range	Low temperature -18℃(0°F) Continuous operating temperature 99℃(210°F) Extreme high temperature 149℃(300°F)		
Elastomer type	HNBR		
Weight	29 KG		
Seal kit	Available		



Equipment information	Model TL 18 3/4" 15K	
Part number	Top Seal	XWHY0082(645068-01-00-02)
	Front Seal	XWHY0278(644404-01-00-03)
Description	VBR Ram Packer 3 1/2"-7 5/8" Model TL, 18 3/4" 15K Standard Service API Temperature Class: BCE	
Performance requirement	API 16A PR2	
Equipment rated working pressure	15000 psi	
Temperature range	Low temperature -18℃(0°F) Continuous operating temperature 99℃(210°F) Extreme high temperature 149℃(300°F)	
Elastomer type	HNBR	
Weight	72 KG	
Seal kit	Available	



Equipment information	Model TL 18 3/4" 15K	
Part number	Left Side Packer	XWHY0311 (2231544-03/2232808-01)
	Right Side Packer	XWHY0310 (2231547-03/2232808-02)
	Blade Packer	XWHY0309 (2231541-01/2283867-02)
	Top Seal	XWHY0308 (644369-03/645068-01-00-02)
Description	Shearing Ram Packer CDVS Type Model TL, 18 3/4" 15K Standard Service API Temperature Class: BDF	
Performance requirement	API 16A PR2	
Equipment rated working pressure	15000 psi	
Temperature range	Low temperature -18℃(0°F) Continuous operating temperature 116℃(240°F) Extreme high temperature 177℃(350°F)	
Elastomer type	HNBR	
Weight	25 KG	
Seal kit	Available	



Equipment information	Model TL 18 3/4" 15K			
Part number	3 1/2"	Front Seal	XWHY0327	644427-04-00-01
	5 1/2"	Front Seal	XWHY0328	644427-09-00-01
	5 7/8"	Front Seal	XWHY0083	645070-27-00-01
	7"	Front Seal	XWHY0329	644427-13
	9 5/8"	Front Seal	XWHY0330	644427-17-00-01
	Top Seal		XWHY0082	645068-01-00-02
Description	Ram Packer 3 1/2", 5 1/2", 5 7/8", 7" ,9 5/8" Model TL, 18 3/4" 15K Standard Service API Temperature Class: BDF			
Performance requirement	API 16A PR2			
Equipment rated working pressure	15000 psi			
Temperature range	Low temperature -18℃(0°F) Continuous operating temperature 116℃(240°F) Extreme high temperature 177℃(350°F)			
Elastomer type	HNBR			
Weight	25KG			
Seal kit	Available			

Technical Data Sheet

Type U Shearing Ram Packers



Shearing Ram Packers				Seal Kit
NO.	Size and Working Pressure	Pipe size(inch)	Drawing No.	Available
1	Type U Shearing 7 1/16"- 10K/15K SBR	Top seal	XWSY1936	√
2		Side packer(Left)	XWSY1396	
3		Side packer(Right)	XWSY1397	
4		Blade seal	XWSY1398	
5	Type U Shearing 11"- 5K/10K (DS Shearing Blind Ram) ISR	Top seal	XWSY503	√
6		Side packer(Left)	XWSY3126	
7		Side packer(Right)	XWSY3127	
8		Blade seal(Left)	XWSY3128	
9		Blade seal(Right)	XWSY3129	
10	Type U Shearing11"-15K SBR	Top seal	XWSY792	√
11		Side packer(Left)	XWSY810	
12		Side packer(Right)	XWSY801	
13		Blade seal	XWSY833	
14	Shaffer Type Shearing 11"-15K	Upper packer	XWSY1047	√
15		Lower packer	XWSY1048	
16	Type U Shearing 13 5/8"-5K/10K SBR	Side packer(Left)	XWSY811	√
17		Side packer(Right)	XWSY812	
18		Blade seal	XWSY033	
19		Top seal	XWSY034	
20	Type U Shearing 13 5/8"-5K/10K ISR	Side packer(Left)	XWSY1007	√
21		Side packer(Right)	XWSY1008	
22		Blade seal(Left)	XWSY1009	
23		Blade seal(Right)	XWSY1010	
24		Top seal	XWSY1000	
25	Type U Shearing 13 5/8"-15K SBR	Side packer(Left)	XWSY1451	√
26		Side packer(Right)	XWSY1452	
27		Blade seal	XWSY033	
28		Top seal	XWSY1498	



Technical Data Sheet

Type U Ram Packer

Type U Ram Packers			Seal Kit
NO.	Size and Working Pressure	Pipe Size (inch)	Available
1	7 1/16"-3K/5K/10K and 15K	C.S.O, 2 3/8", 2 7/8" and 3 1/2"	√
2	11"-3K/5K/10K	C.S.O, 2 3/8", 2 7/8", 3 1/2", 4", 4 1/2", 5", 5 1/2" and 7"	√
3	11"-15K	C.S.O, 2 3/8", 2 7/8", 3 1/2", 4", 4 1/2", 5", 5 1/2" , 7",	√
4	13 5/8"-3K/5K/10K	C.S.O, 2 3/8", 2 7/8", 3 1/2", 4", 4 1/2", 5", 5 1/2" , 6 5/8", 7", 7 5/8", 8 1/8", ,8 5/8", 9 5/8", 9 7/8"and 10 3/4"	√
5	13 5/8"-15K	C.S.O, 3 1/2", 4", 5" and 5 1/2",5 7/8",7", 7 5/8", 9 5/8"	√
6	18 3/4"-10K	5"-5 1/2"	√
7	20 3/4"-3K 21 1/4"-2K	C.S.O, 5" and 13 3/8"	√
8	21 1/4"-5K/10K	C.S.O and 5"	√
9	26 3/4"-2K/3K	C.S.O, 5" and 18 5/8"	√

Technical Data Sheet

Type NXT-M Ram Packer





Equipment information	18 3/4'' 15K		
Part number	3 1/2''	Front Seal	XWHY0071(171034)
	5 1/2''	Front Seal	XWHY0013(171038/16710762-001)
	5 7/8''	Front Seal	XWHY0072(20017704/16710763-001)
	7''	Front Seal	XWHY0073(171040)
	9 5/8''	Front Seal	XWHY0074(170382/126191)
	13 3/8''	Front Seal	XWHY0075(20010488)
	Top seal		XWHY0012(171002)
Description	NXT-M Ram packer 18 3/4'' 15K Standard service API Temperature Class: BDF		
Performance requirement	API 16A PR2		
Equipment rated working pressure	15000psi		
Temperature range	Low temperature -18℃(0℃F) Continuous operating temperature 116℃(240°F) Extreme high temperature 177℃(350°F)		
Elastomer type	HNBR		
Weight	22KG		
Seal kit	Available		



Equipment information	18 3/4'' 15K	
Part number	Front packer	XWHY0049(10868560-001)
	Top seal	XWHY0050(10869549-001)
VBR pipe size range	3 1/2''-6 5/8''	
Description	NXT-M VBR Ram packer 18 3/4'' 15K Standard service API Temperature Class: BCE	
Performance level	API 16A PR2	
Equipment rated working pressure	15000 psi	
Temperature range	Low temperature -18℃(0°F) Continuous operating temperature 99℃(210°F) Extreme high temperature 149℃(300°F)	
Elastomer type	HNBR,NBR	
Weight	28KG	



Equipment information	18 3/4'' 15K	
Part number	Front packer	XWHY0047 (20017659/10939354-001)
	Top seal	XWHY0046(125994)
VBR pipe size range	5''-7''	
Description	NXT-M VBR Ram packer 18 3/4'' 15K Standard Service API Temperature Class: BCE	
Performance level	API 16A PR2	
Equipment rated working pressure	15000 psi	
Temperature range	Low temperature -18℃(0°F) Continuous operating temperature 99℃(210°F) Extreme high temperature 149℃(300°F)	
Elastomer type	HNBR,NBR	
Weight	30KG	



Equipment information	18 3/4'' 15K		
Part number	Upper rubber seal, top seal	XWHY0052(20026217)	
	Lower rubber seal, packer	XWHY0053(20026206)	
Description	NXT-M CVX Shearing ram 18 3/4'' 15K, Standard service API Temperature Class: BDF		
Performance level	API 16A PR2		
Equipment rated working pressure	15000 psi		
Temperature range	Low temperature -18℃(0°F) Continuous operating temperature 116℃(240°F) Extreme high temperature 177℃(350°F)		
Elastomer type	HNBR,NBR		
Weight	12KG		



Equipment information	18 3/4'' 15K		
Part number	Upper rubber seal, top seal	XWHY0048 (20081038/10738107-001)	
	Lower rubber seal, packer	XWHY0076 (20086752/11445843-001)	
Description	NXT-M LFS Shearing ram 18 3/4'' 15K, Standard service API Temperature Class: BDF		
Performance level	API 16A PR2		
Equipment rated working pressure	15000 psi		
Temperature range	Low temperature -18℃(0°F) Continuous operating temperature 116℃(240°F) Extreme high temperature 177℃(350°F)		
Elastomer type	HNBR,NBR		
Weight	10KG		





	Equipment info.	18 3/4'' 15K	
	Part number	Front packer	XWHY0159(3124315)
		Top seal	XWHY0173(3117110)
	VBR pipe size range	5 1/2"-7 5/8"	
	Description	Compact & Conventional VBR Ram Packer 18 3/4" 15K Standard service API Temperature Class FGG	
	Performance level	API 16A Pr2	
	Equipment rated working pressure	15000 psi	
	Temperature range	Low temperature: 4℃(40℉) Continuous operating temperature: other Extreme high temperature:other	
	Elastomer type	HNBR	
	Weight	72KG	
	Seal Kit	Available	

Technical Data Sheet

Type Integrated Ram Packers





Type Integrated Ram Packers				Seal Kit
NO.	Size and Working Pressure	Pipe size(inch)	Drawing No.	Available
1	11"-15K	2 3/8"	XWSY1144	√
2		2 7/8"	XWSY1173	
3		3 1/2"	XWSY1131	
4		4"	XWSY1132	
5		4 1/2"	XWSY1133	
6		5"	XWSY1146	
7		5 1/2"	XWSY1145	
8		6 1/4"	XWSY1134	
9		7"	XWSY1135	
10		8 1/8"	XWSY1136	
11		C.S.O	XWSY1143	
12	13 5/8"-10K	2 3/8"	XWSY558	√
13		2 7/8"	XWSY431	
14		3 1/2"	XWSY432	
15		4"	XWSY781	
16		4 1/2"	XWSY780	
17		5"	XWSY433	
18		5 1/2"	XWSY675	
19		6 5/8"	XWSY794	
20		7"	XWSY560	
21		7 7/8"	XWSY1371	
22		8 1/8"	XWSY860	
23		8 5/8"	XWSY1862	
24		9 5/8"	XWSY561	
25		9 7/8"	XWSY858	
26		10 3/4"	XWSY859	
27		C.S.O	XWSY434	

Technical Data Sheet

RCD Element

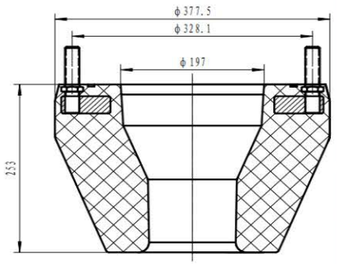



Equipment information	Williams TYPE 7100
Part number	XWSY3884
Description	Williams TYPE 7100 RCD Element For drill pipe 5 7/8" Standard Service
API Temperature Class	EA
Performance level	API 16 RCD
Equipment rated working pressure	5,000 psi
Temperature range	Low temperature -1℃(30℉) Extreme high temperature 82℃(180℉)
Elastomer type	NR
Stripping test	1080 tool joints at 1000psi
Static pressure test	5000 psi
Weight	36KG
Bolts	8 bolts or 12 bolts M18 type

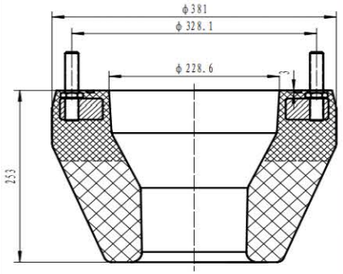



Equipment information	Williams TYPE 7100
Part number	XWSY3885
Description	Williams TYPE 7100 RCD Element For drill pipe 6 5/8" Standard Service
API Temperature Class	EA
Performance level	API 16 RCD
Equipment rated working pressure	5,000 psi
Temperature range	Low temperature -1℃(30℉) Extreme high temperature 82℃(180℉)
Elastomer type	NR
Stripping test	400 tool joints at 1000psi
Static pressure test	5000 psi
Weight	36KG
Bolts	8 bolts or 12 bolts M18 type

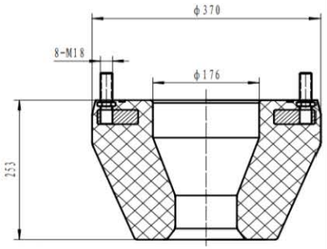



Equipment information	Williams TYPE 7100
Part number	XWSY3095
Description	Williams TYPE 7100 RCD Element For drill pipe 5" Standard Service
API Temperature Class	EA
Performance level	API 16 RCD
Equipment rated working pressure	5000 psi
Temperature range	Low temperature -1℃(30℉) Extreme high temperature 82℃(180℉)
Elastomer type	NR
Stripping test	2006 tool joints at 1000psi
Static pressure test	5000 psi
Weight	36KG
Bolts	8 bolts M18 type

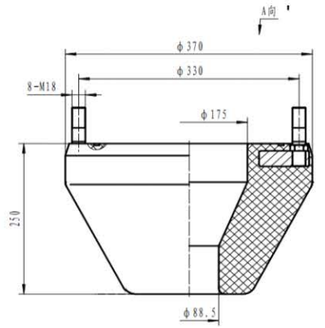



Equipment information	Williams TYPE 7100
Part number	XWSY696
Description	Williams TYPE 7100 RCD Element For drill pipe 4 1/2" Standard Service
API Temperature Class	EA
Performance level	API 16 RCD
Equipment rated working pressure	5000 psi
Temperature range	Low temperature -1℃(30℉) Extreme high temperature 82℃(180℉)
Elastomer type	NR
Stripping test	2010 tool joints at 1000psi
Static pressure test	5000 psi
Weight	36KG
Bolts	8 bolts M18 or M20 type

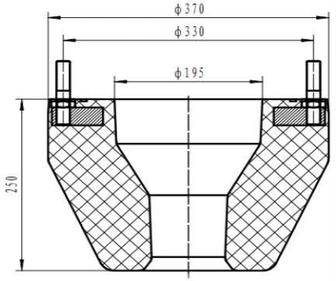



Equipment information	Williams TYPE 7100
Part number	XWSY3707
Description	Williams TYPE 7100 RCD Element For drill pipe 5" Standard Service
API Temperature Class	EA
Performance level	API 16 RCD
Equipment rated working pressure	5000 psi
Temperature range	Low temperature -1℃(30℉) Extreme high temperature 82℃(180℉)
Elastomer type	NR
Stripping test	2006 tool joints at 1000psi
Static pressure test	5000 psi
Weight	36KG
Bolts	8 bolts M18 type

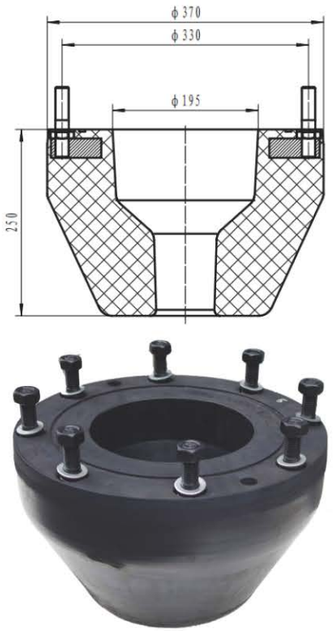

Equipment information	Williams TYPE 7100
Part number	XWSY3684
Description	Williams TYPE 7100 RCD Element For drill pipe 4" Standard Service
API Temperature Class	EA
Performance level	API 16 RCD
Equipment rated working pressure	5000 psi
Temperature range	Low temperature -1℃(30℉) Extreme high temperature 82℃(180℉)
Elastomer type	NR
Stripping test	2010 tool joints at 1000psi
Static pressure test	5000 psi
Weight	36KG
Bolts	8 bolts M18 type

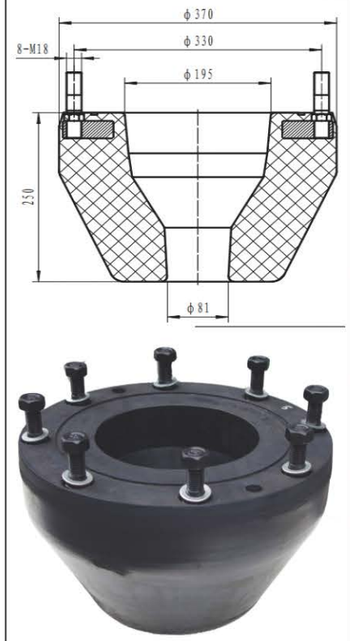

Equipment information	Williams TYPE 7100
Part number	XWSY2437
Description	Williams TYPE 7100 RCD Element For drill pipe 4 1/2" Standard Service
API Temperature Class	EA
Performance level	API 16 RCD
Equipment rated working pressure	5000 psi
Temperature range	Low temperature -1℃(30℉) Extreme high temperature 82℃(180℉)
Elastomer type	NR
Stripping test	2010 tool joints at 1000psi
Static pressure test	5000 psi
Weight	36KG
Bolts	8 bolts M18 type

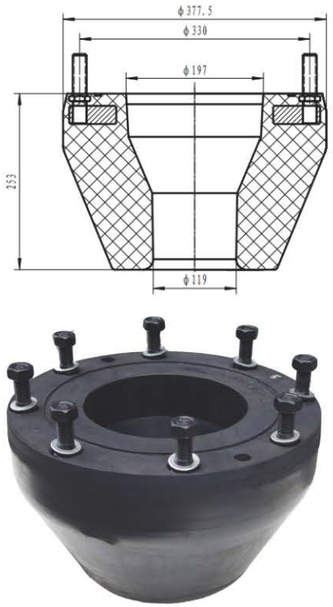

Equipment information	Williams TYPE 7100
Part number	XWSY2652
Description	Williams TYPE 7100 RCD Element For drill pipe 5 1/2" Standard Service
API Temperature Class	EA
Performance level	API 16 RCD
Equipment rated working pressure	5000 psi
Temperature range	Low temperature -1℃(30℉) Extreme high temperature 82℃(180℉)
Elastomer type	NR
Stripping test	2006 tool joints at 1000psi
Static pressure test	5000 psi
Weight	36KG
Bolts	8 bolts M18 type

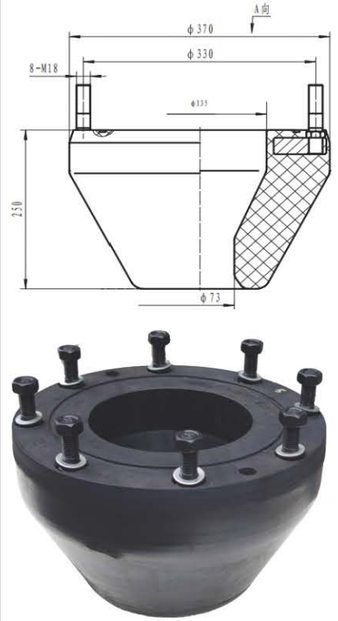

Equipment information	Williams TYPE 7100
Part number	XWSY892
Description	Williams TYPE 7100 RCD Element For drill pipe 3 1/2" Standard Service
API Temperature Class	EA
Performance level	API 16 RCD
Equipment rated working pressure	5000 psi
Temperature range	Low temperature -1℃(30℉) Extreme high temperature 82℃(180℉)
Elastomer type	NR
Stripping test	2311 tool joints at 1000psi
Static pressure test	5000 psi
Weight	36KG
Bolts	8 bolts M18 type

MPD RCD ELEMENT

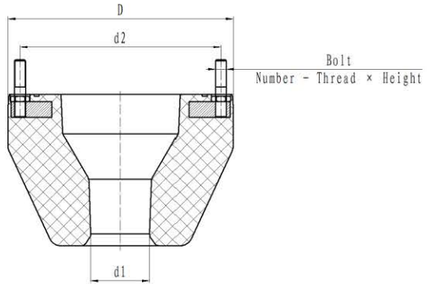

Item	Drawing No	Pipe Size	d1	D1	d2	Bolt			Note
						Number	Thread	Height	
1	XWSY1056	2 7/8"	ϕ52	ϕ370	ϕ330	8	M18	57	
2	XWSY4183	3 1/2"	ϕ73	ϕ370	ϕ330	8	M18	57	
3	XWSY4244	3 1/2"	ϕ73	ϕ377.5	ϕ330	12	M18	51	
4	XWSY3684	4"	ϕ78	ϕ370	ϕ330	8	M18	57	
5	XWSY4243	4"	ϕ78	ϕ377.5	ϕ330	12	M18	51	
6	XWSY2437	4 1/2"	ϕ84	ϕ370	ϕ330	8	M18	57	
7	XWSY4013	5"	ϕ97	ϕ370	ϕ330	8	M18	57	
8	XWSY4186	5"	ϕ97	ϕ377.5	ϕ328	12	M18	51	
9	XWSY3860	5 1/2"	ϕ114	ϕ377.5	ϕ330	8	M18	57	
10	XWSY3671	5 1/2"	ϕ119	ϕ377.5	ϕ328	12	M18	51	
11	XWSY2652	5 7/8"	ϕ119	ϕ377.5	ϕ330	8	M18	57	
12	XWSY3884	5 7/8"	ϕ119	ϕ377.5	ϕ328	12	M18	57	
13	XWSY3885	6 5/8"	ϕ140	ϕ381	ϕ328	12	M18	57	

RCD ELEMENT

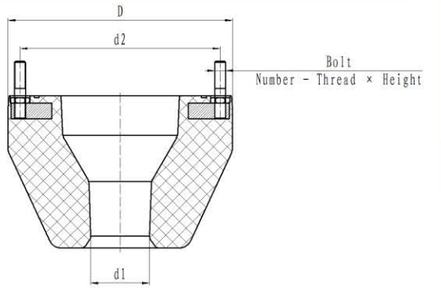

Item	Drawing No	Pipe Size	d1	D1	d2	Bolt			Note
						Number	Thread	Height	
1	XWSY3300	C.S.O	/	ϕ370	ϕ330	8	M18	53	
2	XWSY1056	2 7/8"	ϕ52	ϕ370	ϕ330	8	M18	57	
3	XWSY3211	3 1/2"	ϕ60	ϕ370	ϕ330	8	M18	57	For square drill pipe
4	XWSY4183	3 1/2"	ϕ73	ϕ370	ϕ330	8	M18	57	For Hexagonal drill pipe
5	XWSY1578	3 1/2"	ϕ75	ϕ377.5	ϕ330	8	M18	57	
6	XWSY4244	3 1/2"	ϕ73	ϕ377.5	ϕ330	12	M18	51	
7	XWSY3684	4"	ϕ78	ϕ370	ϕ330	8	M18	57	
8	XWSY4243	4"	ϕ78	ϕ377.5	ϕ330	12	M18	51	
9	XWSY2437	4 1/2"	ϕ84	ϕ370	ϕ330	8	M18	57	
10	XWSY3707	5"	ϕ97	ϕ370	ϕ330	8	M18	57	
11	XWSY4004	5"	ϕ97	ϕ370	ϕ330	8	M18	57	
12	XWSY4236	5"	ϕ97	ϕ370	ϕ330	8	M18	57	
13	XWSY4234	5"	ϕ97	ϕ370	ϕ330	8	M18	67	
14	XWSY4245	5"	ϕ97	ϕ370	ϕ320.7	8	M16	57	
15	XWSY4186	5"	ϕ97	ϕ377.5	ϕ328	12	M18	57	
16	XWSY4186	5"	ϕ97	ϕ377.5	ϕ328	12	M18	51	
17	XWSY489	5"	ϕ102	ϕ377.5	ϕ330	8	M18	57	
18	XWSY3112	5"	ϕ103.5	ϕ397.5	ϕ347.6	10	M18	52.5	
19	XWSY3860	5 1/2"	ϕ114	ϕ377.5	ϕ330	8	M18	57	
20	XWSY3860	5 1/2"	ϕ114	ϕ377.5	ϕ330	8	M18	57	For Hexagonal drill pipe
21	XWSY3861	5 1/2"	ϕ114	ϕ377.5	ϕ330	8	M18	57	
22	XWSY3671	5 1/2"	ϕ119	ϕ377.5	ϕ328	12	M18	51	
23	XWSY3113	5 1/2"	ϕ108.5	ϕ397.5	ϕ347.6	10	M18	52.5	
24	XWSY2652	5 7/8"	ϕ119	ϕ377.5	ϕ330	8	M18	57	
25	XWSY3884	5 7/8"	ϕ119	ϕ377.5	ϕ328	12	M18	57	
26	XWSY3885	6 5/8"	ϕ140	ϕ381	ϕ328	12	M18	57	
27	XWSY3279	6 5/8"	ϕ140	ϕ397.5	ϕ347.6	10	M18	52.5	